MILLTRONICS

XPS/XCT SERIES TRANSDUCERS

Instruction Manual June 2002

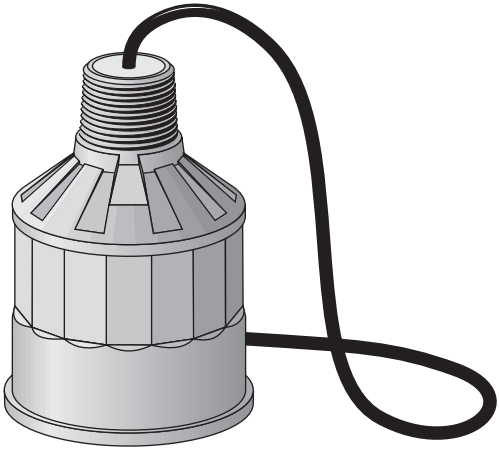

XPS/XCT TRANSDUCERS

Safety Guidelines

Warning notices must be observed to ensure personal safety as well as that of others, and to protect the product and the connected equipment. These warning notices are accompanied by a clarification of the level of caution to be observed.

Qualified Personnel

This device/system may only be set up and operated in conjunction with this manual. Qualified personnel are only authorized to install and operate this equipment in accordance with established safety practices and standards.

Warning: This product can only function properly and safely if it is correctly transported, stored, installed, set up, operated, and maintained.

Note: Always use product in accordance with specifications.

Contact SMPI Technical Publications at the following address:

Technical Publications
Siemens Milltronics Process Instruments Inc.
1954 Technology Drive, P.O. Box 4225
Peterborough, Ontario, Canada, K9J 7B1
Email: techpubs@milltronics.com

For the library of SMPI instruction manuals, visit our Web site: **www.milltronics.com**

General Information

Refer to this manual for proper installation, operation, and maintenance of the XPS/XCT Series Transducers.

Special attention must be paid to warnings and notes highlighted from the rest of the text by grey boxes.

⚠ **WARNING** means that failure to observe the necessary precautions can result in death, serious injury, and/or considerable material damage.

Note means important information about the product or that part of the operating manual.

IMPORTANT: All specifications are subject to change without notice. Please ensure that any safety-related information is confirmed with a qualified Siemens Milltronics representative.

About the Transducer

The Echomax XPS / XCT series of transducers operates in association with Milltronics ultrasonic level monitoring products.

The transducer converts the electrical energy of the transmit pulse from the transceiver into acoustical energy. It then converts the acoustical energy of the echo back into electrical energy for the transceiver receive period.

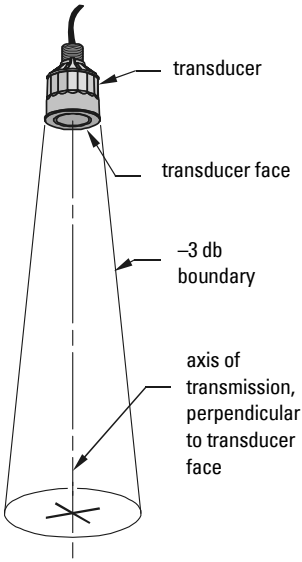

The effective acoustical energy is emitted from the transducer face and radiated outward, decreasing in amplitude at a rate inversely proportional to the square of the distance. Maximum power is radiated axially (perpendicular) from the transducer face in a line referred to as the axis of transmission. Where power is reduced by half (– 3 dB), a conical boundary defining the sound beam, centered about the axis of transmission, is established. The diametric measurement of the cone in degrees defines the beam angle. Impedance matching techniques are used to optimize the transfer of power from the transducer into air and vice versa.

The XPS / XCT transducers incorporate an integral temperature sensor that reports the air temperature at the transducer to the transceiver. The connection is transparent, in that both the ultrasonic and temperature components of the transducer use the same leads.

General Guidelines

> ⚠ **WARNING:** Materials of construction are chosen based on their chemical compatibility (or inertness) for general purposes. For exposure to specific environments, check with chemical compatibility charts before installing.

XPS/XCT Series - Certificate SIRA 99ATEX5153X

This equipment may be used in hazardous areas associated with all gases with temperature classes T1, T2, T3 and T4 for the XPS series (XPS-10, XPS-15, XPS-30 and XPS-40) and T1, T2 and T3 for the XCT series (XCT-8 and XCT-12). The XPS series is only certified for use in ambient temperatures in the range of - 40°C to 95°C and the XCT series is only certified for use in ambient temperatures in the range of -40°C to 145°C. Neither should be used outside of their respective temperature ranges.

Installation shall be carried out in accordance with the applicable code of practice, and by suitably trained personnel.

These devices should only be supplied from a circuit containing a suitably-rated fuse that has a breaking capacity of 4000A. This fuse is included in Siemens Milltronics' transceivers.

Repair of this equipment shall be carried out in accordance with the applicable code of practice.

The certification of this equipment relies on the following materials used in their construction:

Material	XPS Series	XCT Series
Enclosure	Kynar® [1]710	Kynar® 710
Encapsulant	Stycast LA-9823-76	Durapot® 861-F3 & 864

1. Kynar® is a registered trademark of ELF Atochem.
   Durapot® is a registered trademark of Cotronics Corporation.

Manual override can be accomplished by using the disconnect switch provided in the building installation of the associated controller.

XPS D Series - Certificate SIRA 01ATEX5262X

This equipment may be used in all hazardous dust zones with all conductive and non-conductive dusts. The Type XPS-10D, XPS-15D, XPS-30D and XPS-40D Series transducers have a maximum surface temperature of 135°C (275°F) (Temperature Class T4). These units are certified for use in ambient range of -40 to 95°C (-40 to 203°F). The transducers should not be used outside this temperature range. The XPS-10D, XPS-15D, XPS-30D and XPS-40D Ultrasonic Transducers must be installed so the face of the transducer is not substantially subjected to light.

Installation shall be carried out in accordance with the applicable code of practice, and by suitably trained personnel.

These devices should only be supplied from a circuit containing a suitably rated fuse that has a breaking capacity of 4000A. This fuse is included in Siemens Milltronics transceivers.

Repair of the equipment shall be carried out in accordance with the applicable code of practice and Installation Instructions.

The certification of this equipment relies on the following materials used in their construction:

Enclosure	Kynar® complete with carbon nanotube (Polyvinylidene Flouride (PVDF) with carbon nanotube [RTP Part No. 3399 X 93208 E]).
Encapsulant	Stycast LA-9823-76 or Durapot® 864 (as appropriate)

Manual override can be accomplished by using the disconnect switch provided in the building installation of the associated controller.

XPS D Series Product Marking

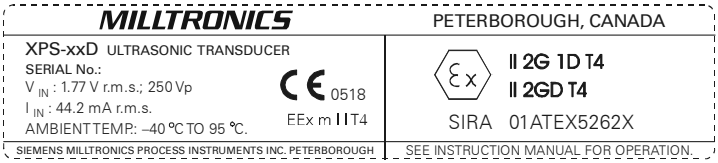

Note: Kynar® polyvinylidene flouride is resistant to attack from most chemicals under the described operating conditions. However, for exposure to specific environments, check with chemical compatibility charts before installing the XPS/XCT Transducers in your application.

⚠ **WARNING:** This product is designated as a Pressure Accessory per Directive 97/23/EC and is <u>not</u> intended for use as a safety device.

Specifications

Model :	XPS - 10	XPS - 15	XPS - 30	XPS - 40	XCT - 8	XCT - 12
Measurement Range, m (ft):	0.3 - 10 (1-33)	0.3 - 15 (1-50)	0.6 - 30 (2-100)	0.9 - 40 (3-130)	0.6 - 8 (2-26)	0.6 - 12 (2-40)
Frequency (kHz):	44	44	30	22	44	44
Beam Angle:	12°	6°	6°	6°	12°	6°
Environmental:						
-location:	indoor / outdoor					
-altitude:	2000 m maximum					
-ambient temperature:	-40 to 95 °C (-40 to 203 °F)				-40 to 145 °C (-40 to 293 °F)	
-pollution degree:	4					
Construction:						
-exposure:	Kynar®				Standard: Kynar® Optional: Universal*** sized flange available with Teflon® facing	
-mounting:	1" NPT or BSP conduit connection		1-1/2" NPT or BSP conduit connection		1" NPT or BSP conduit connection	
-options:	» factory bonded to suit ANSI, DIN and JIS standards » polyethylene foam facing for dusty or steamy environments » submergence shield, where flooding can occur (only available for XPS-10, XPS-15) » split flange for field mounting to suit ANSI, DIN and JIS standards (not available for XPS-40)					
-cable:	**Included:** 2-wire twisted pair / braided and foil shielded, 0.5mm² (20 AWG), PVC jacket				Silicone jacket	
			2-wire twisted pair / braided and foil shielded, 0.5mm² (20 AWG), PVC jacket **Maximum separation:** 100 m (330 ft)			
			RG-62 A/U coax **Maximum separation**: 365 m (1200 ft)			
Supply Source:	transducer shall only be supplied by Milltronics certified controllers					
Weight*, kg (lb):	0.8 (1.7)	1.3 (2.8)	4.3 (9.5)	8 (18)	0.8 (1.7)	1.3 (2.8)
Separation:	365 m (1200 ft) from transducer					
Approvals:	CE **, CSA, FM, CENELEC/ATEX see nameplate or consult Milltronics for current approvals					

* approximate shipping weight of transducer with standard cable length
** EMC performance available upon request
***Universal flange fits ANSI, DIN, and JIS standards.
Kynar® is registered trademark of ELF Atochem
Teflon® is a registered trademark of DuPont

Outline and Dimensions

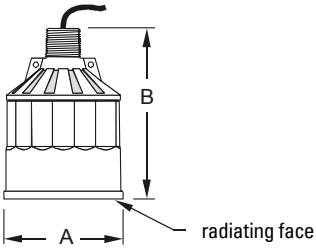

standard

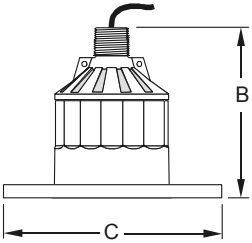

optional bonded flange
refer to associated instructions

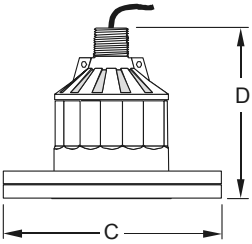

optional split flange
refer to associated instructions

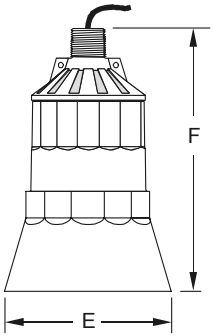

optional submergence shield
refer to associated instructions

Model						
Dimension	XPS 10	XPS - 15	XPS - 30	XPS - 40	XCT - 8	XCT - 12
A	86 mm (3.4")	119 mm (4.7")	173 mm (6.8")	206 mm (8.1")	86 mm (3.4")	119 mm (4.7")
B	122 mm (4.8")	132 mm (5.2")	198 mm (7.8")	229 mm (9.0")	122 mm (4.8")	132 mm (5.2")
C	to suit ANSI, DIN and JIS standards					
D*	128 mm (5.0")	138 mm (5.4")	204 mm (8.0")	235 mm (9.2")	128 mm (5.0")	138 mm (5.4")
E	124 mm (4.9")	158 mm (6.2")	n / a	n / a	n / a	n / a
F	152 mm (6.0")	198 mm (7.8")	n / a	n / a	n / a	n / a

* nominal

⚠ **WARNING;** Optional Split Flange, Bonded Flange, and Easy Aimer configurations are not suitable for pressure applications.

Mounting

Dos and Don’ts

Special handling precautions must be taken to protect the face of the transducer from any damage.

Mount the transducer so that it is **above the maximum material level by at least the blanking value.** Refer to the associated transceiver manual.

On liquid applications, the transducer must be mounted so that the axis of transmission is perpendicular to the liquid surface.

On solids applications, a Milltronics Easy Aimer should be used to facilitate aiming of the transducer.

Do not overtighten mounting. Hand tightening of the mounting hardware is sufficient for most applications.

Secure installation by connecting a safety chain from the transducer to a structural member.

Consider the optional **temperature sensor** when mounting the transducer.

Note: For pressure tight applications, install transducers hand tight plus ½ turn to 1½ turns. Teflon® [1] tape or other appropriate sealant may be used to aid in sealing the threads for use in pressure applications.

1. Teflon® is a registered trademark of DuPont.

Mounting - Solids Applications

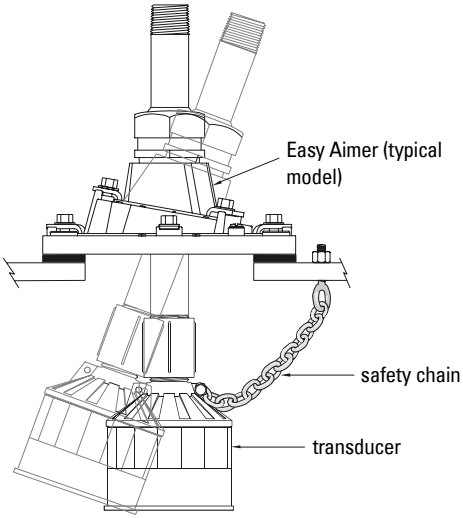

⚠ **WARNING:** Improper installation may result in loss of process pressure.

Mounting - Liquid Applications

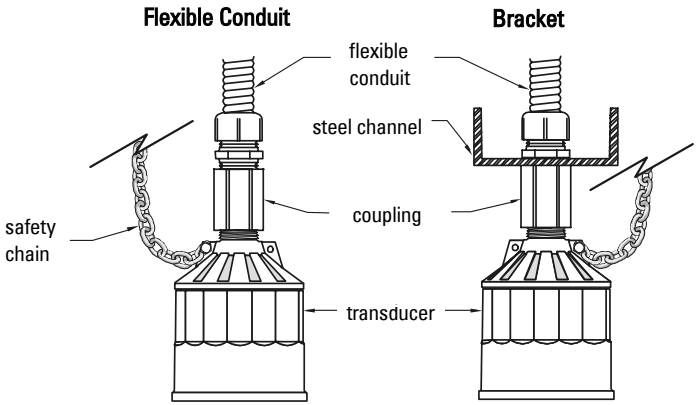

Flexible conduit mounted transducer should not be subjected to wind, vibration or jarring.

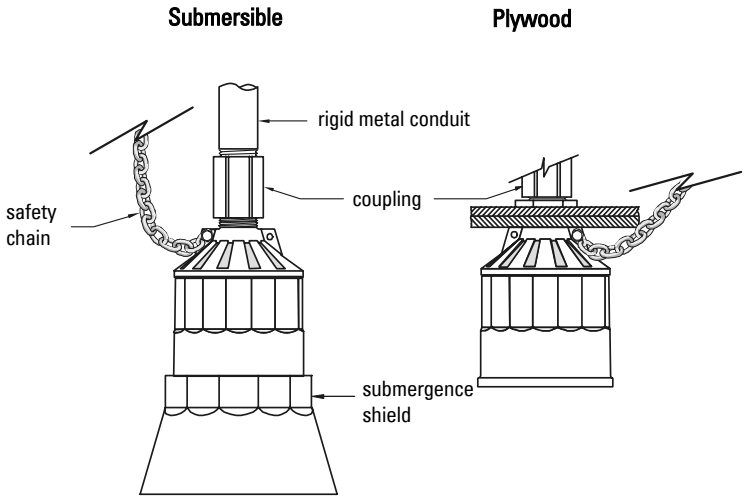

Submersible transducer, used in applications where flooding is possible.

Plywood mounting provides excellent isolation, but must be rigid enough to avoid flexing if subjected to loading.

Mounting - Liquid Applications (cont'd)

Blind Flange

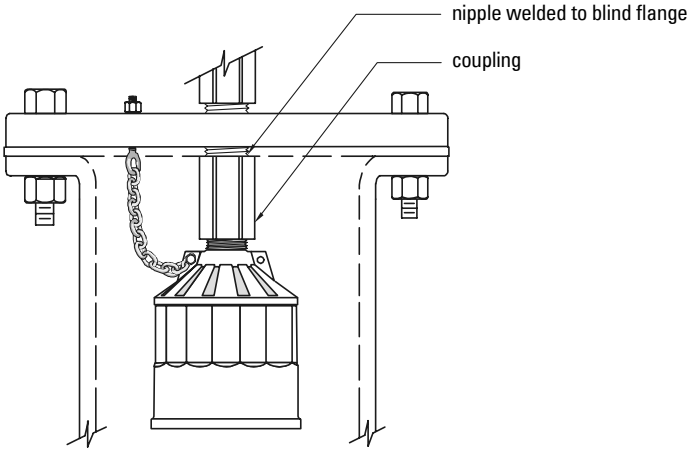

Flange, gasket and hardware supplied by customer.
Refer to Liquid Applications - Standpipes

Note: Tighten the flange bolts evenly in order to ensure a good seal between the mating flanges.
Caution: Overtightening can cause performance degradation.

Flanged

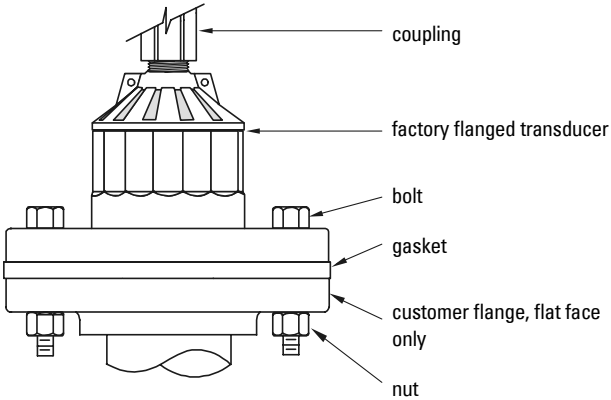

Customer flanged standpipe. If a metal flange must be welded to pipe, refer to Liquid Applications - Standpipes.

Interconnection

Milltronics transceiver (typical)

Direct Connection

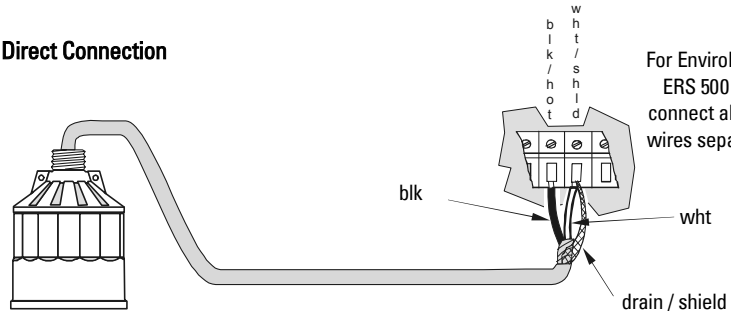

2 Wire Extension

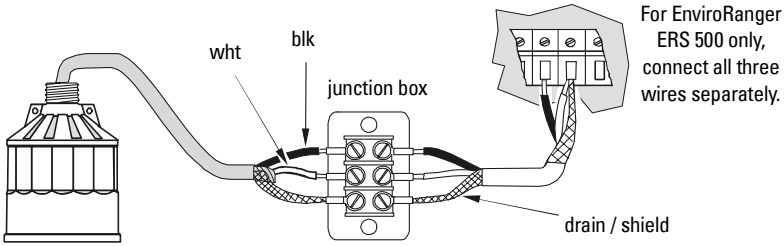

extend cable using 18 AWG shielded / twisted pair

Coaxial Extension

When connecting to an EnviroRanger 500, do NOT use coaxial cable, use a 2-wire extension as illustrated above.

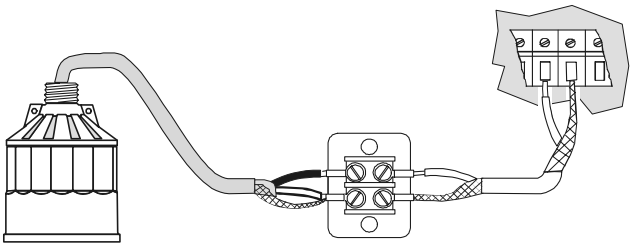

extend cable using RG - 62 A/U coax for optimum noise immunity

Dos and Don’ts

Installation shall only be performed by qualified personnel and in accordance with local governing regulations.

Do not route cable openly.

For optimum isolation against electrical noise, run cable separately in a grounded metal conduit.

Seal all thread connections to prevent ingress of moisture.

Do not run cable near high voltage or current runs, contactors and SCR control drives.

Note: For pressure tight applications, install transducers hand tight plus ½ turn to 1½ turns. Teflon® tape or other appropriate sealant may be used to aid in sealing the threads for use in pressure applications.

⚠ **WARNING:** Never attempt to loosen, remove, or disassemble process connection while vessel contents are under pressure.

Applications

The transducer is to be used only in the manner outlined in this instruction manual.

Normally, the transducer requires no cleaning or maintenance. However, if performance changes are observed, immediately shut down the level measurement system and perform a thorough inspection, especially on the transducer.

Liquid Applications - Stilling Well / OCM

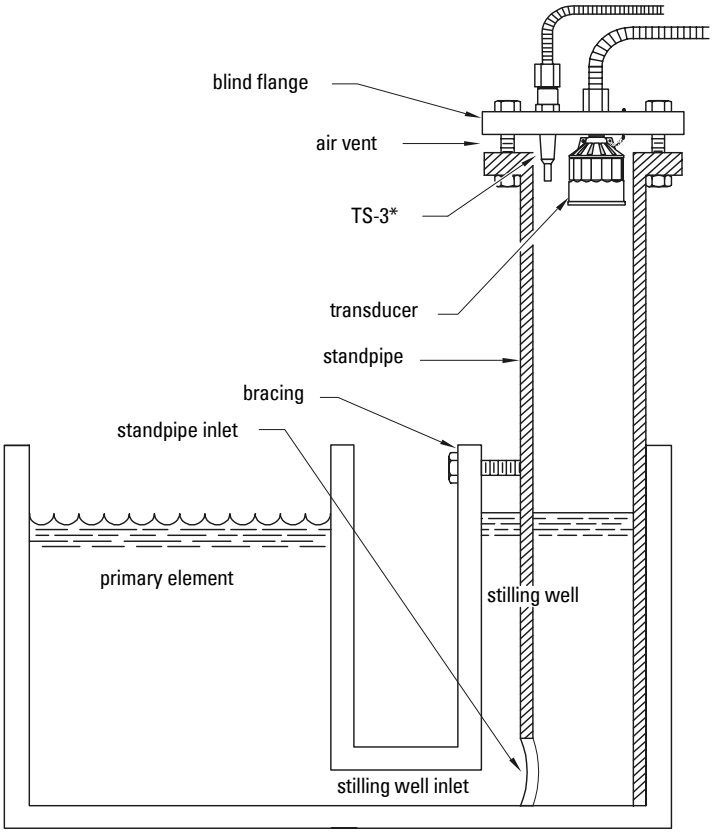

Refer to Liquid \ Applications - Standpipes.

* the use of a TS-3 temperature sensor provides better temperature tracking in applications where the temperature can change quickly.

Liquid Applications - Submergence

In applications where flooding is possible the transducer* can be fitted with a submergence shield. The shield acts as a bell to create an air pocket in front of the transducer face. The associated transceiver* interprets this as a flooding condition, and reacts accordingly.

Refer to transceiver manual for programming requirements.

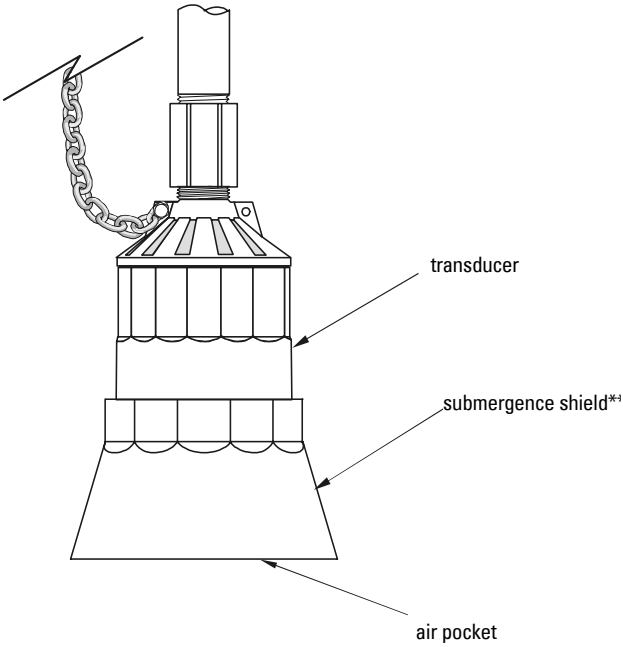

* on applicable models.
** refer to associated instruction manual for assembly details.

Liquid Applications - Standpipes

In many applications access must be made via a standpipe. In such cases, Milltronics can provide factory bonded flanged transducers or split flange kit that will readily mate to the flanged standpipe. Another option is to hang the transducer from a blind flange.

The standpipe length should be as short and the diameter as large as possible. As a rule of thumb, the –3 dB cone of the sound beam should not intersect the standpipe wall in applications opening into a vessel or larger area. Otherwise, additional blanking will be required to compensate for the interference zone created by the opening.

Note: When using a stilling well, make sure there is no build-up, welds, couplings, or other debris on the inside of the well wall. This can affect reliability of level measurement.

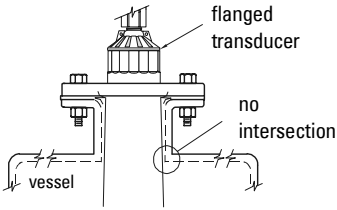

no additional blanking required

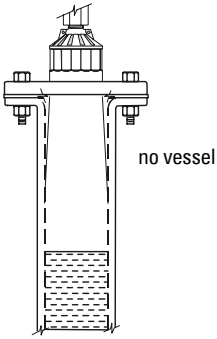

no additional blanking required

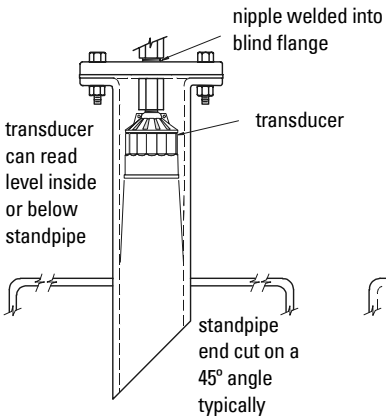

no additional blanking required

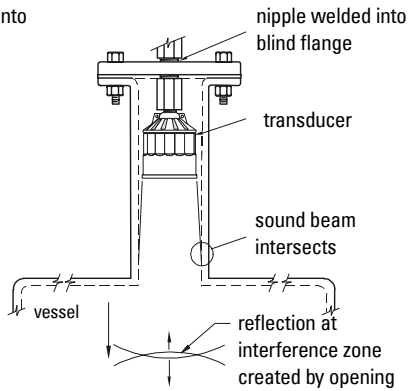

near blanking extension of 150 mm (6") past end of standpipe may be required.

Liquid Applications - Volume

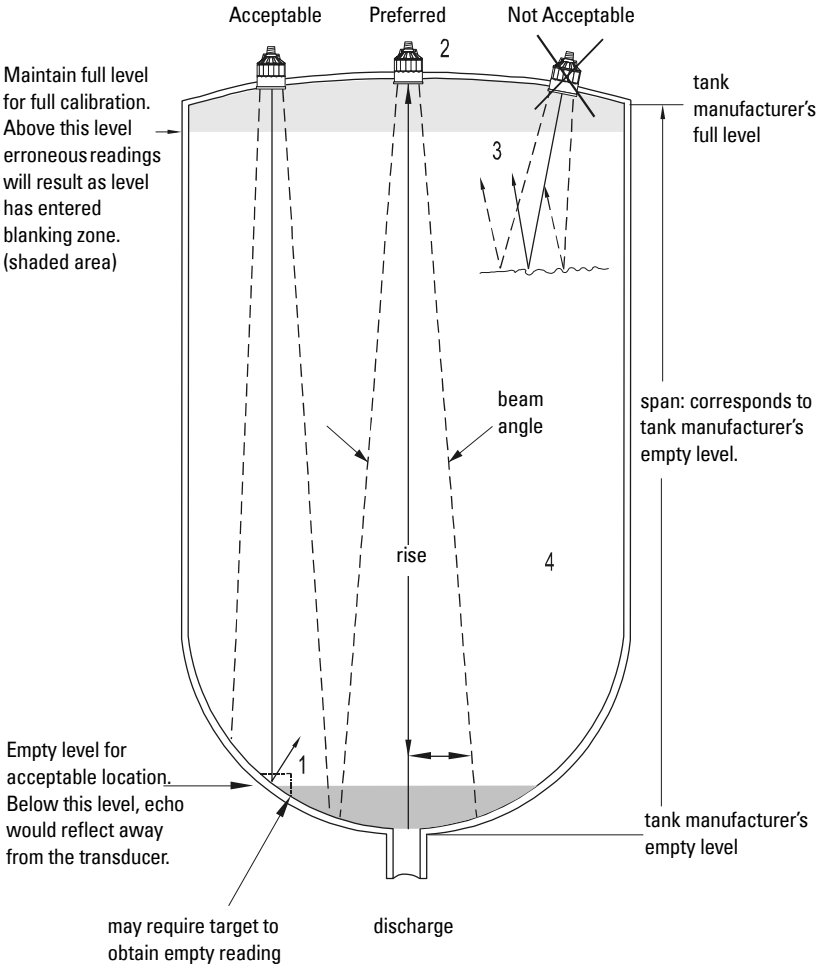

1. Beam should not detect bin bottom. If this occurs use range extension parameters (on transceivers where available) to omit false echoes. A 6° beam angle represents a rise : run of about 20 : 1 (10 : 1 for 12°). In most tanks, the transducer should be centered as much as possible (without interference from inlet) for optimum reading range.
2. Sound beam must be perpendicular to liquid surface. If standpipe is used, refer to Liquid Applications - Standpipes.
3. Echo has missed improperly leveled transducer.
4. When performing an empty or full calibration, the tank must contain its normal vapour and be at its normal temperature.

Liquid Applications - Water / Wastewater

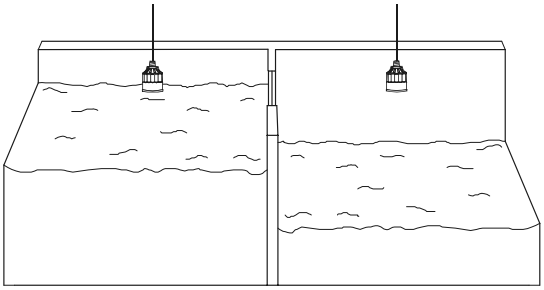

Differential Level

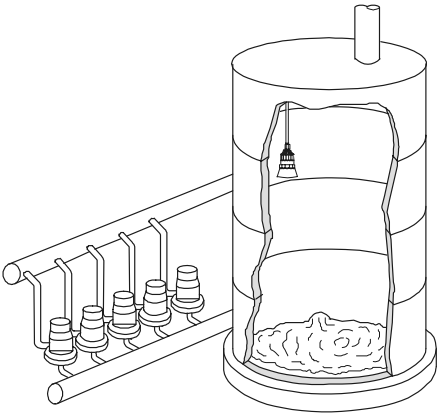

Pump Control

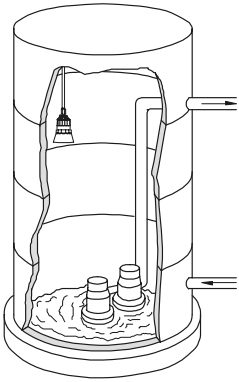

Sewage Lift

Solids Applications - Typical

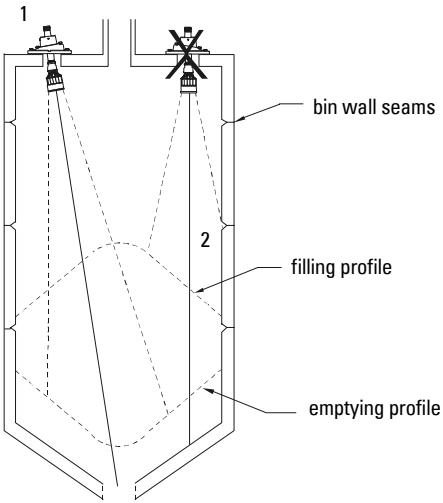

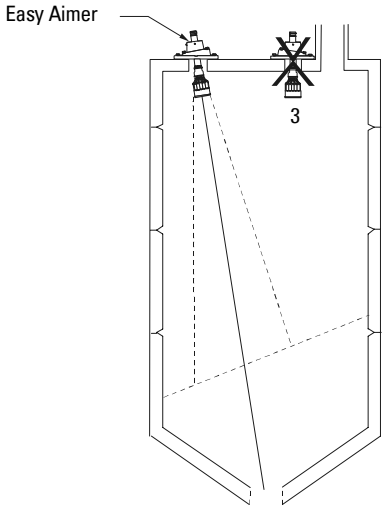

1. Transducer angled to avoid seams in bin wall and aimed at discharge in order to read bin when empty.
2. Avoid intersecting bin wall seams, structural members and wall irregularities. Otherwise, refer to transceiver manual.

3. Transducer too close to material inlet. Falling material will intersect sound beam and cause erroneous readings or loss of echo.

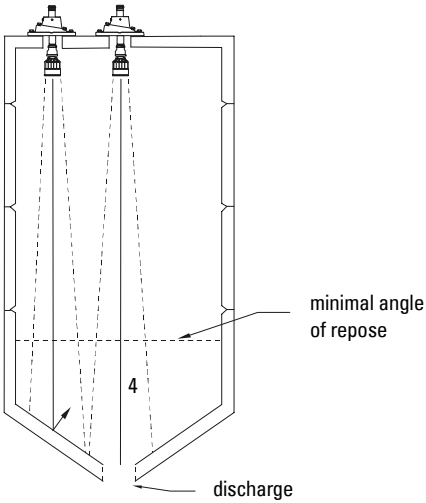

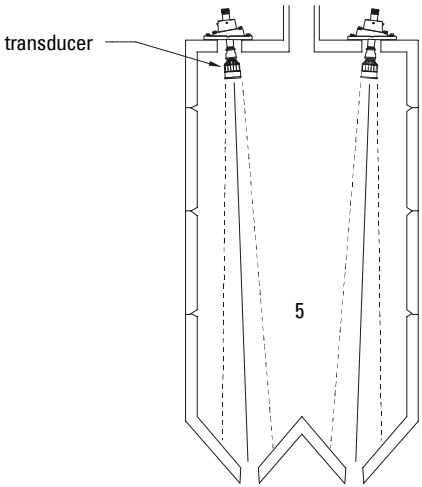

4. On fluid-like solids, aim transducer perpendicular to material surface.

5. On dual discharge bins, aim each transducer at the discharge point.

Solids Applications - Special

Storage Bin with Agitator

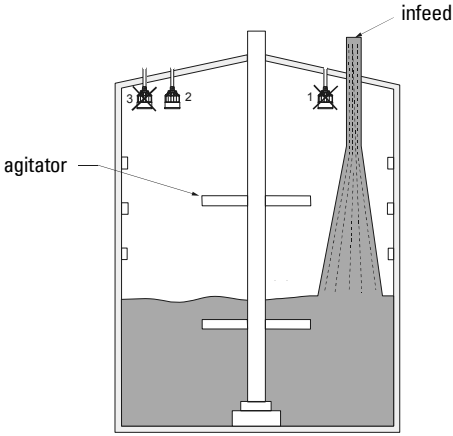

1. Transducer should be kept away from infeed.
2. Where agitators are in use, use the Agitator Discrimination parameter on transceivers where available.
3. Transducer should be aimed away from wall projections.

Dryer - Wood Chips

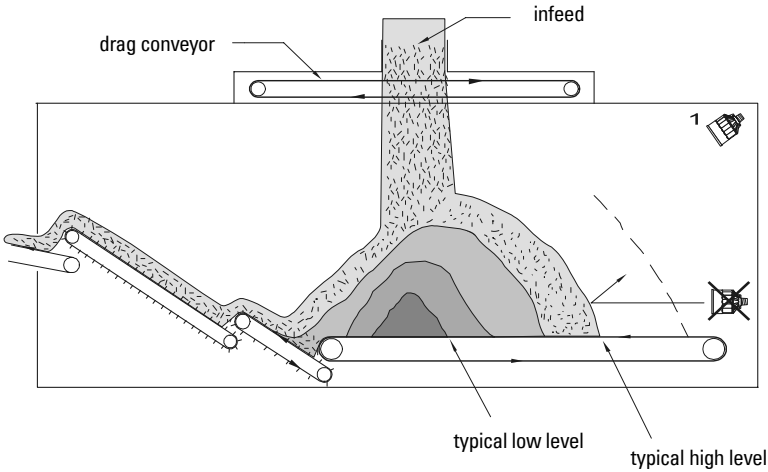

5. Transducer should be mounted perpendicular to slope of wood chips.

Installation Diagram

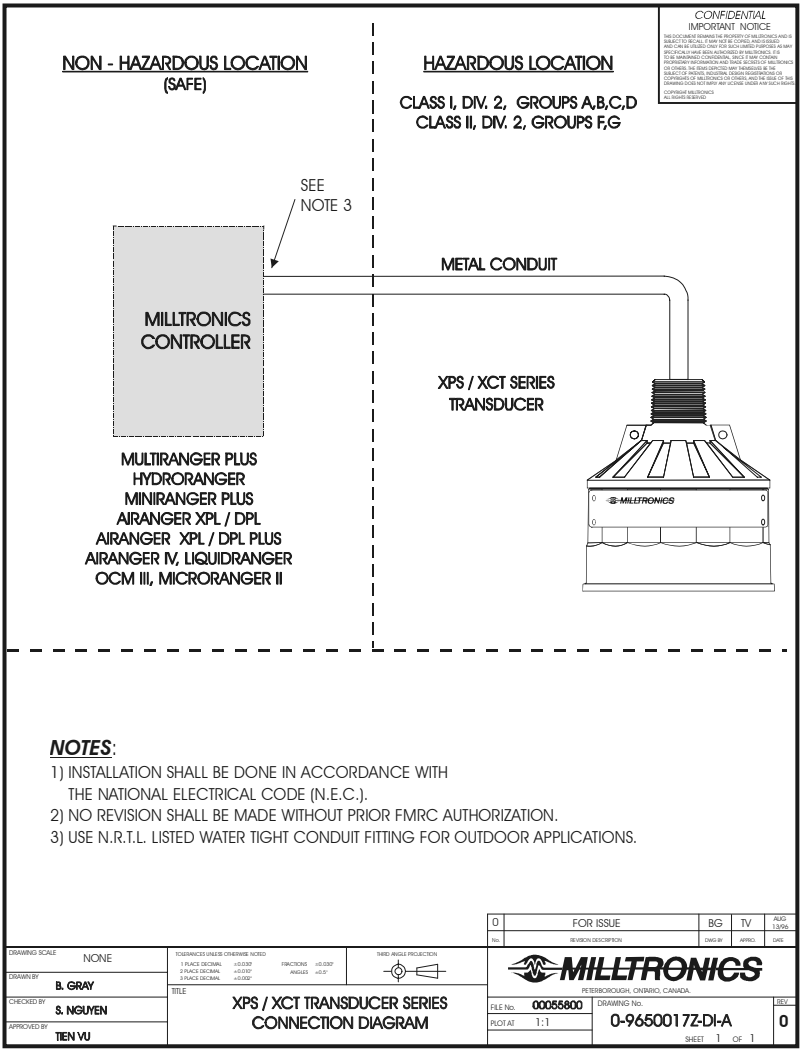

See Milltronics drawing number 0-9650017Z-DI-A for current drawing status.

For Canadian Hazardous Installation Only

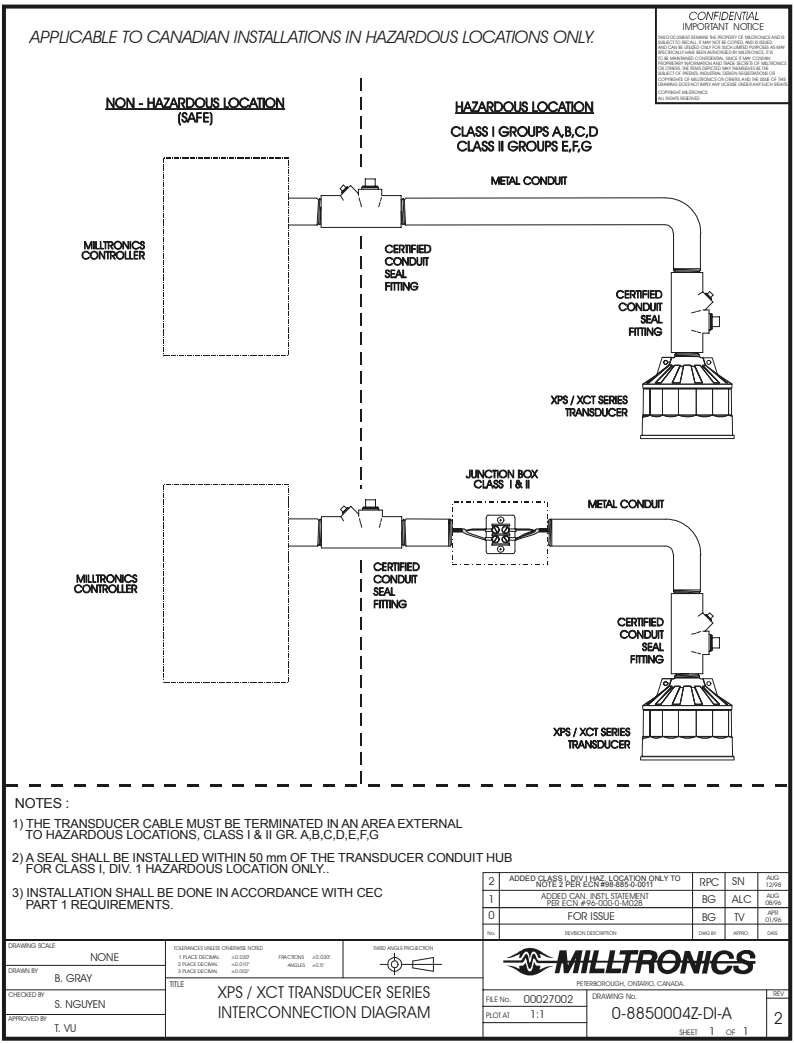

See Milltronics drawing number 0-8850004Z-DI-A for current drawing status.

MILLTRONICS

Siemens Milltronics Process Instruments Inc.
1954 Technology Drive, P.O. Box 4225
Peterborough, ON.Canada K9J 7B1
Tel: (705) 745-2431 Fax: (705) 741-0466
www.milltronics.com

7 M L 1 9 9 8 1 A K 0 1
Printed in Canada

Rev. 1.4